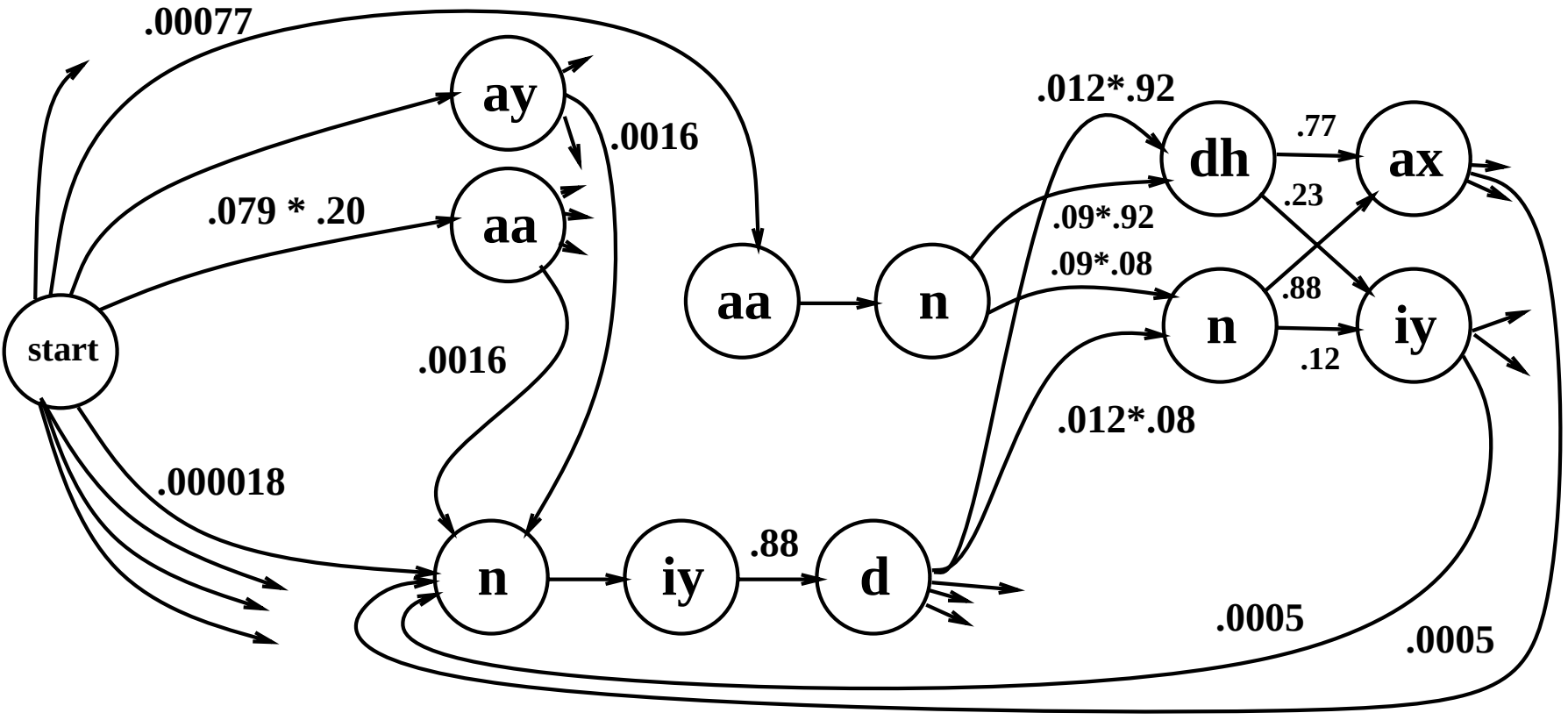
.00077
ay
.0016
.012*.92
dh
.77
ax
.23
.079 * .20
aa
.09*.92
.09*.08
aa
n
n
.88
iy
start
.0016
.12
.012*.08
.000018
n
iy
.88
d
.0005
.0005